• Hinges with roller bearings, with body in sintered steel and black colour painting. They are composed by three sectors, two connected to the frame chassis-door with adjusting in vertical direction, one central connected to the leaf and possibility to adjust in horizontal direction. The construction permits to adjust the position of the leaf even after mounting by screws that, in working conditions, are covered by plastic caps.

• Besides, it permit to change hinges in case of worn-out or breaking.

• Hardware included: fire proof lock and cylinder with three keys, lock type flush bolt on secondary leaf, black handle, upper door closer on both leaves, arm closing selector, rostrum between the hinges.

• Painting in RAL colours (brushed) to choose from a list of available colours.

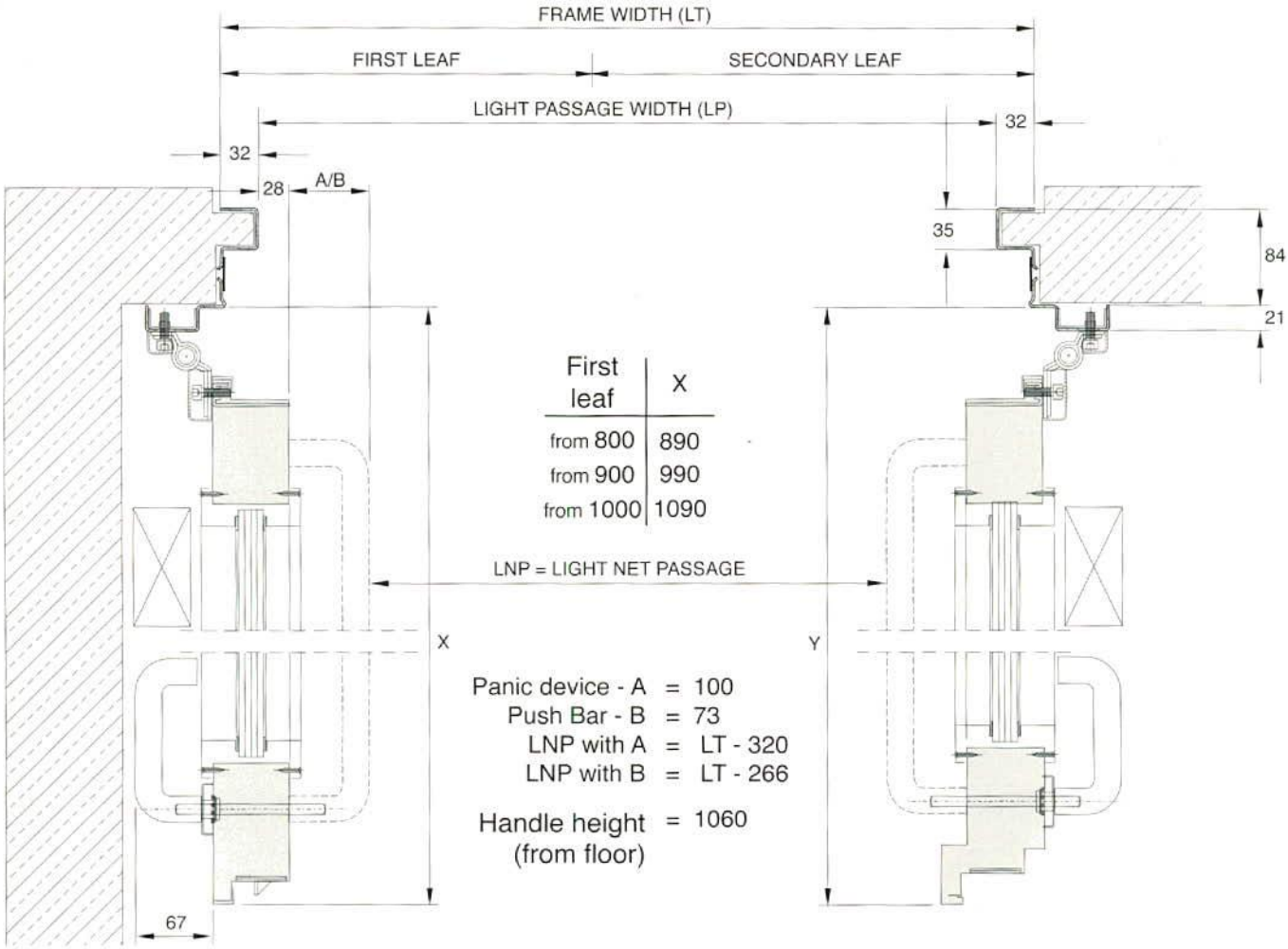

First leaf	X
from 800	890
from 900	990
from 1000	1090

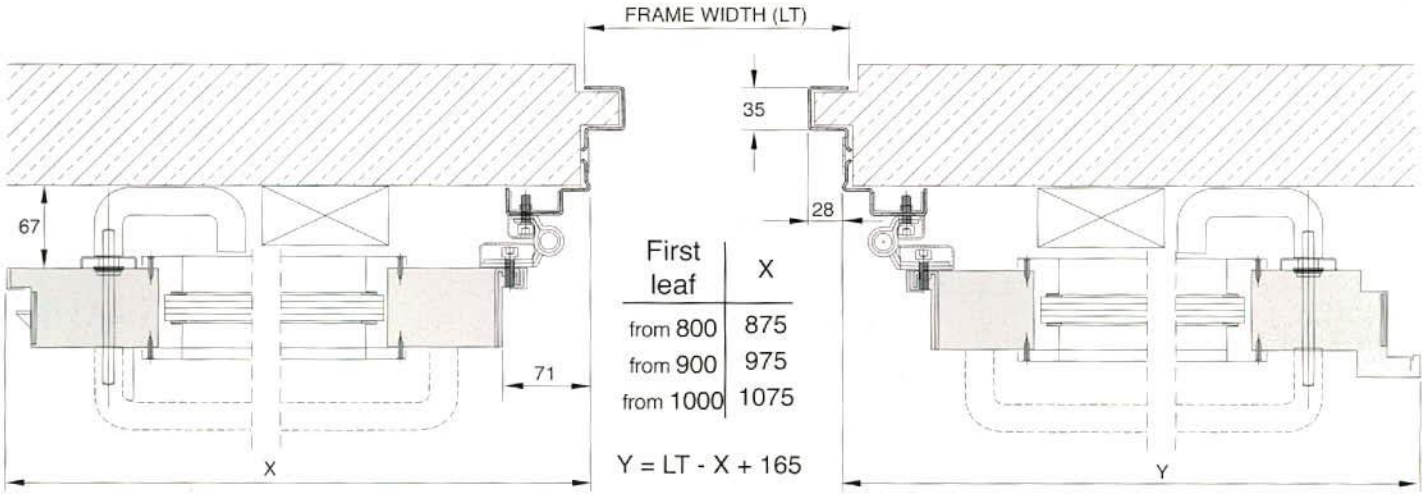

First leaf	X
from 800	875
from 900	975
from 1000	1075

Y = LT - X + 165