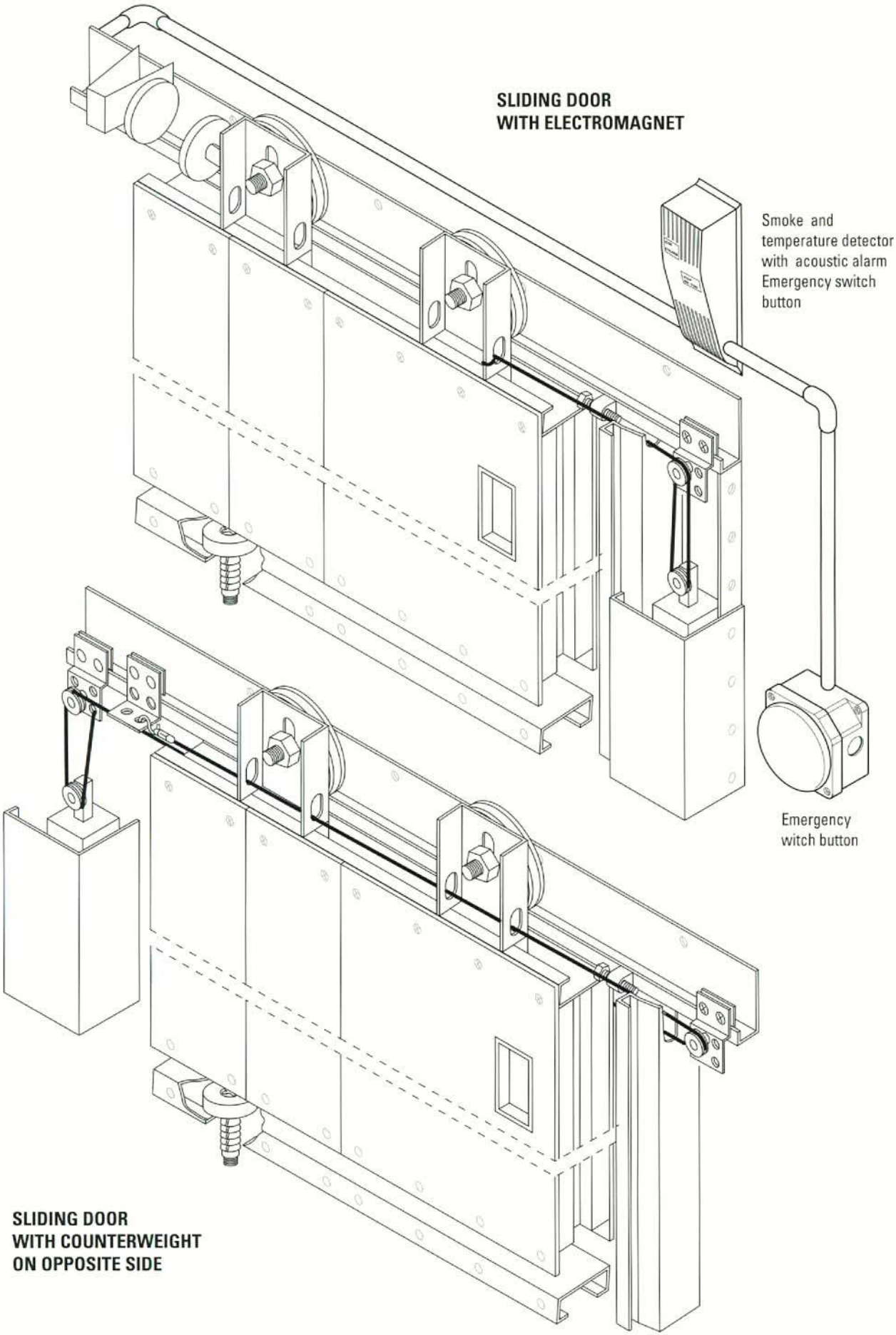WORKING SCHEME